CHARACTERISTICS	
Contact resistance	15mΩ max. (initial)
Insulation resistance	100MΩ min. (at 500 VDC)
Dielectric strength	1,000 VAC,50/60Hz for 1 minute between
Mechanically service life	1,000,000 operations min.
Electrically service life	100,000 operations min.

Rating	15A 125VAC or 250VAC
Terminal	SCREW
Item No.	Z15G1303
OF max.	141gf
RF min.	14gf
PT max.	4mm
OT min.	1.6mm
MD max	1.3mm
FP max	31.8mm
OP	28.6±0.8mm

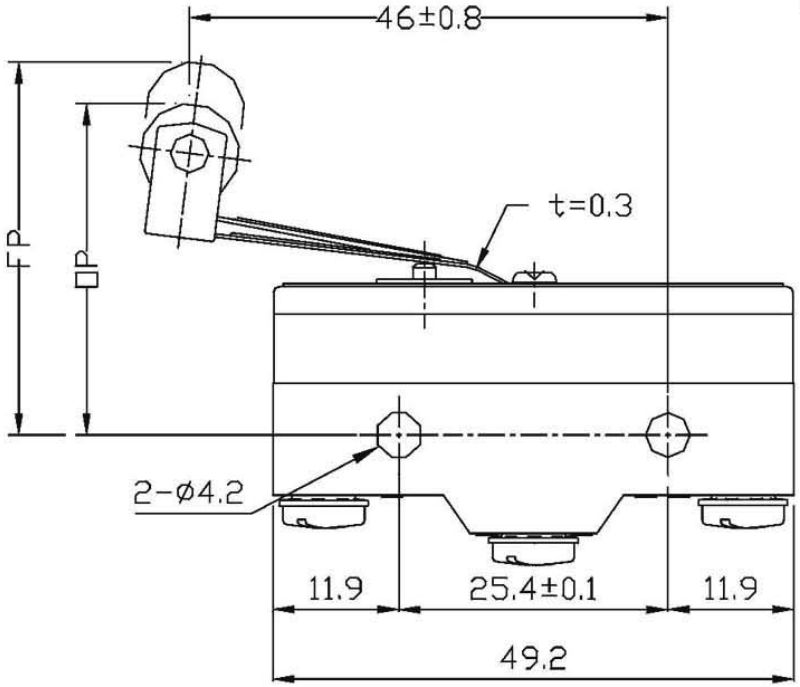

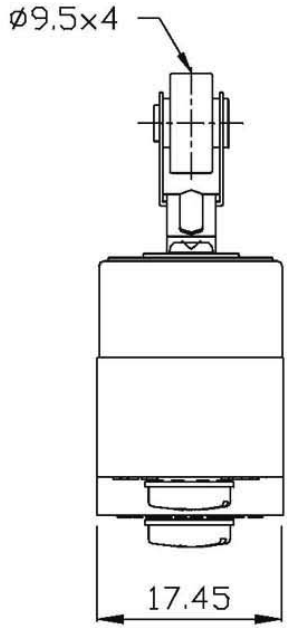

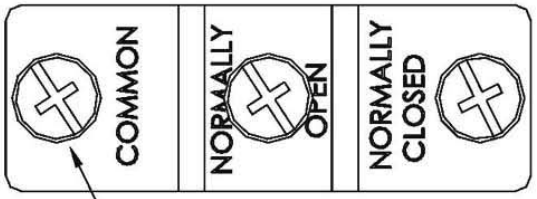

3-M4X5.0
Terminal Screw
with toothed lock washer

ISS	NOTE	DESCRIPTION	GRID	DRW	APP	DATE
B		1. The power change from cup washer to toothed lock washer		ARTHUR		2003/03/18
A		FIRST ISSUE		Arthur		2002/4/24

喜威達企業股份有限公司
SWEETA PRODUCTS CORPORATION

TITLE: SZ15G1303 CHARACTERISTICS

FINISH

MATERIAL:

DWG NO.

A3

TOLERANCE	
0.000"±0.25"	0.000±0.005
0.00"±0.5"	0.00±0.10
0.0"±1"	0.0±0.20
0"±2"	0±0.50
ANGULAR	LINEAR

DRAWN Arthur DATE 2003/03/18
CHECKED DATE
APPROVER DATE
SCALE 2.5: 1