Rating	3A 125V AC , 1.5A 250V AC	Mounting Hole	Circuit Diagram
Contact Resistance	50m ohm Max.	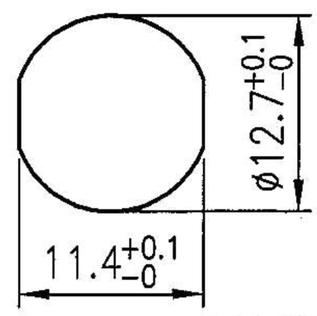	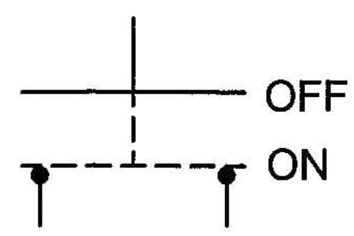
Insulation Resistance	DC 500V 100M ohm Min.		
Dielectric Strength	AC 1500V 1 minute		
Switch Function	2P SPST OFF-ON		

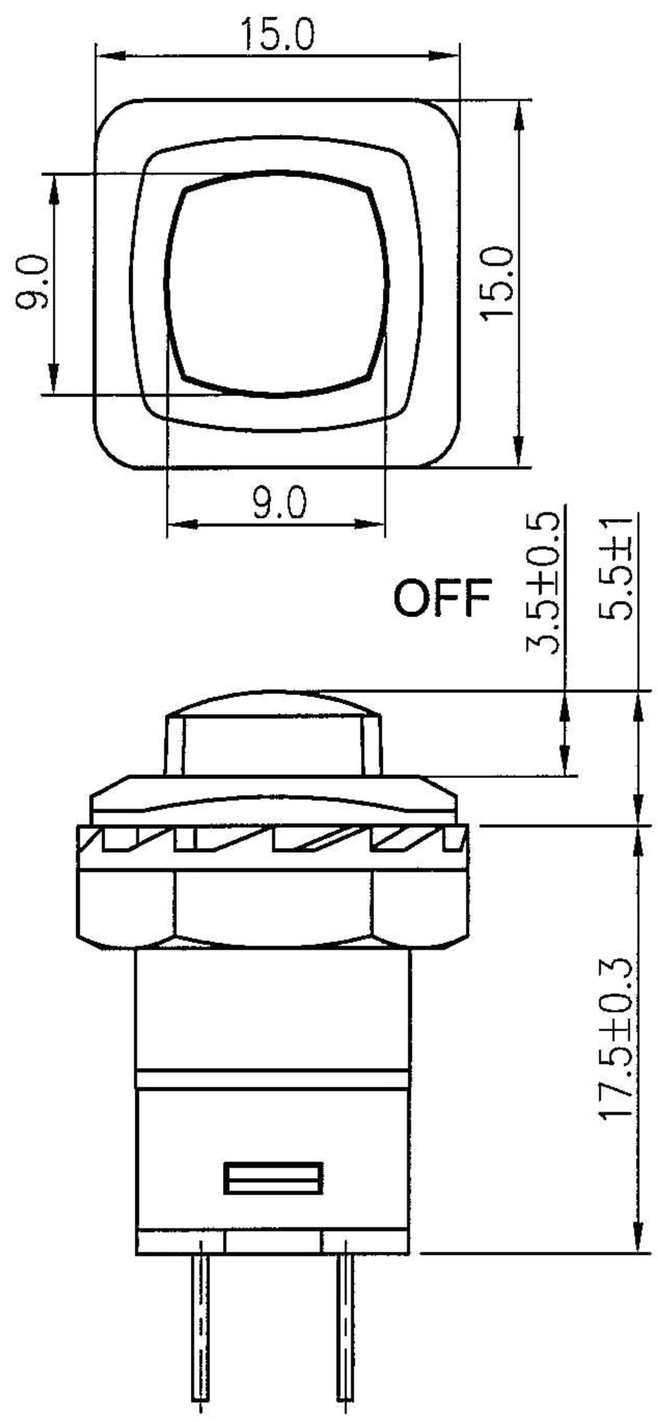

Material:
Frame: Nylon#66+33%GF, Black
Actuator: Nylon#66, Red
Terminals: Silver Plated Brass
Printed: White, hot stamping

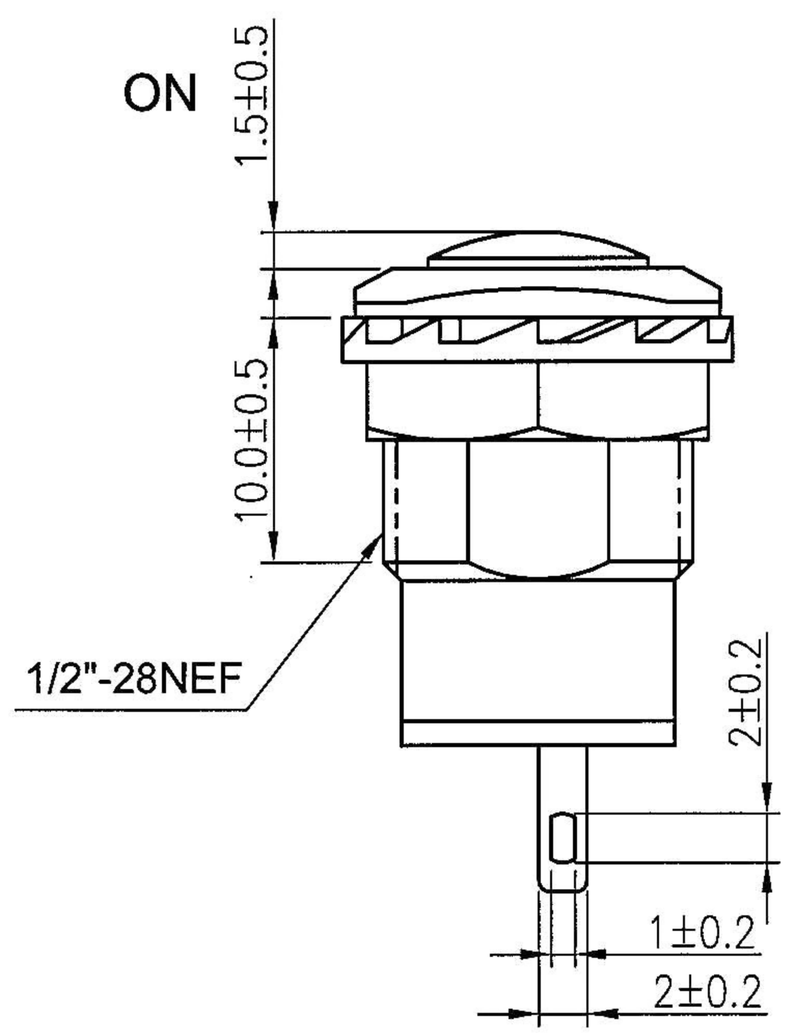

Tolerances Unless Otherwise Specified ±0.3

								△
								△
Date	Name	Description						NO
Drawn	Checked	Approved	SCI BOM NO.			Model Name	PUSH SWITCH	
曹盈芳		王伟杰	Customer No.			Model No.	SPR13-511B-05	Rev.
10/24/'13		10/24/13	Unit	mm	SWEETA PRODUCTS CORPORATION			0